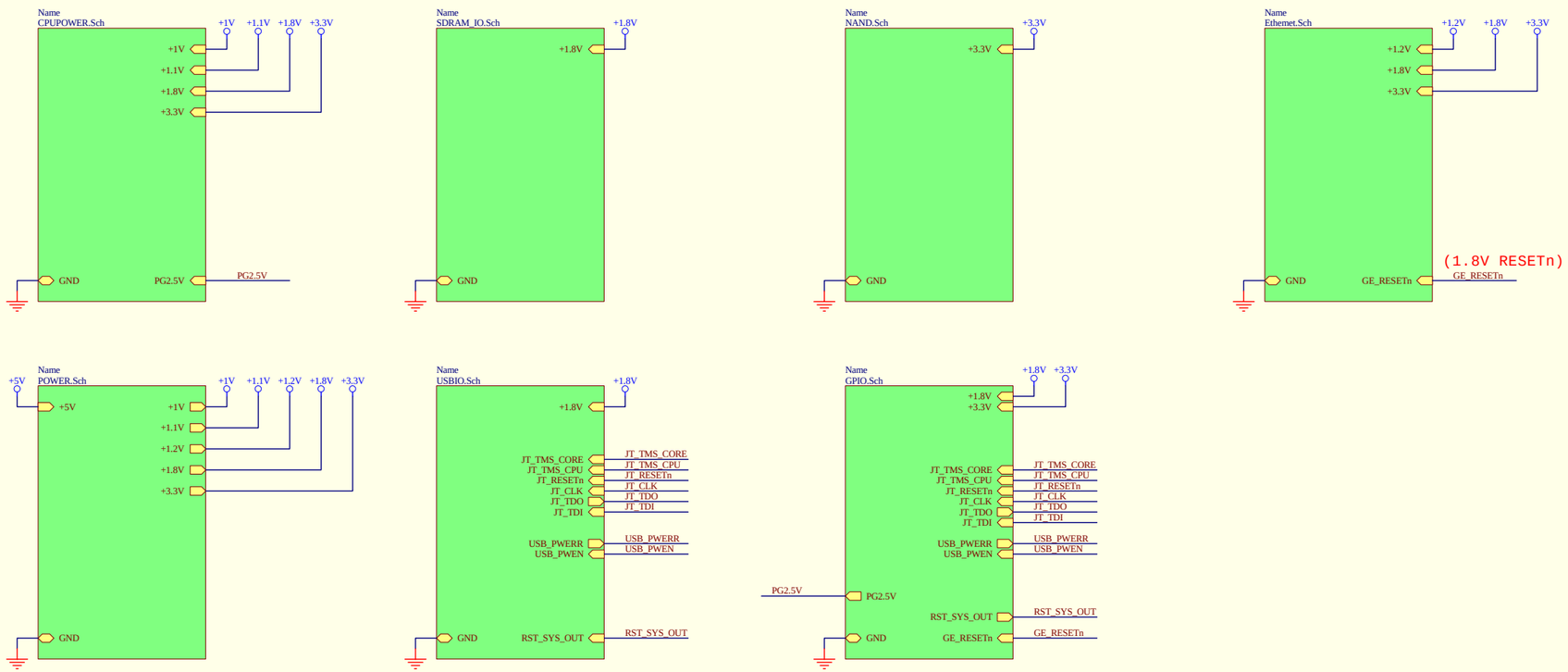

SHEEVA PLUG

Error : GS1.jpg file not found.	www.globalscaletechnologies.com	SHEEVA PLUG	Date : 18-Feb-2009	Time : 09:43:14	Sheet No.1	Paper Size A3	Designer : GTI-EE	Remark	Modify: SHEEVA V6.0
			File : SHEEVA.Sch		Total pages :10		drawer : GTI-EE		Print Area X:1550 Y:1110

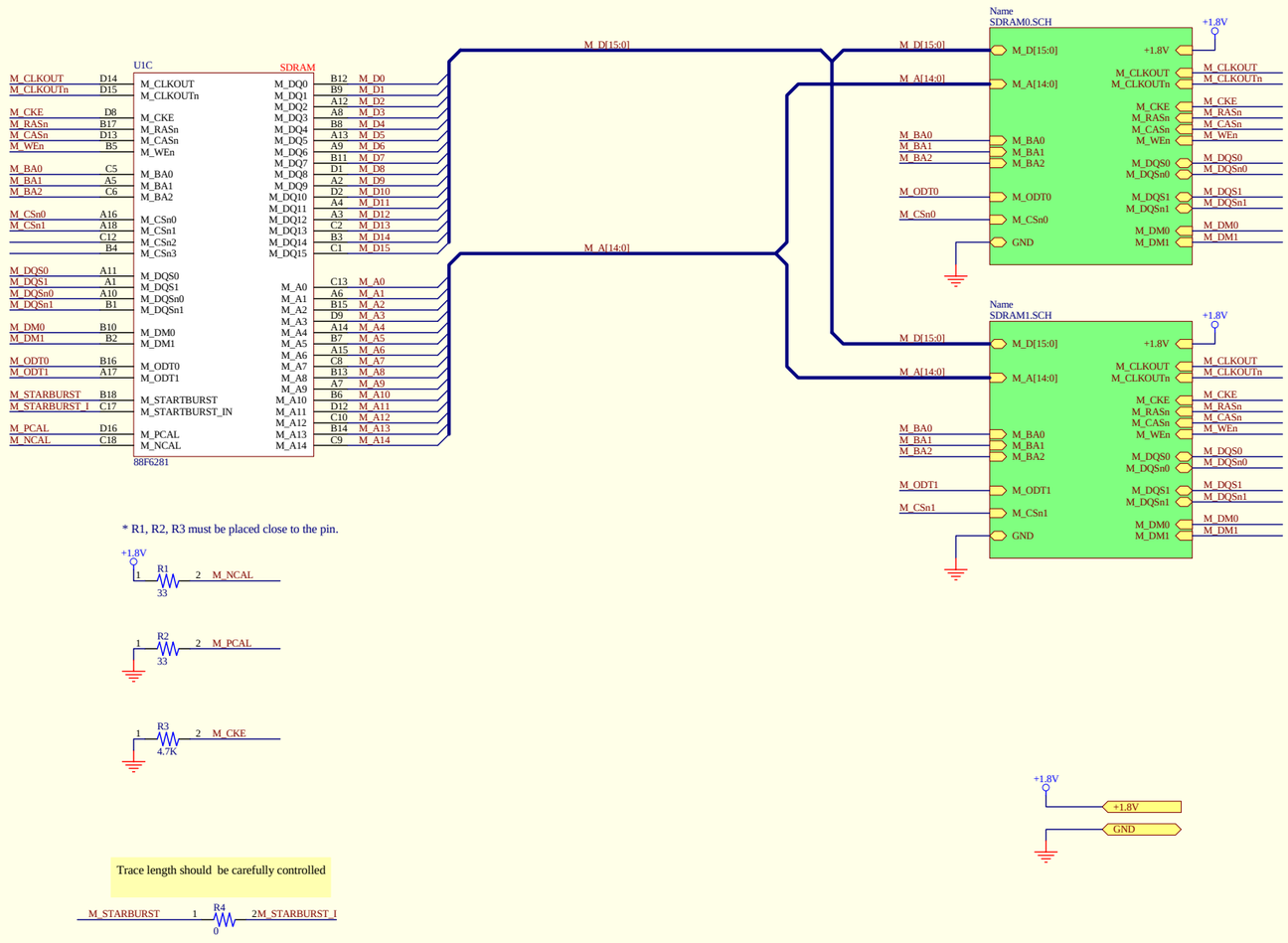

Error : GS1.jpg file not found.	www.globalscaletechnologies.com	SHEEVA PLUG	Date : 18-Feb-2009	Time : 09:43:14	Sheet No.2	Paper Size A3	Designer : GTI-EE	Remark	Modify: SHEEVA V6.0
			File : SDRAM_IO.Sch		Total pages :10		drawer : GTI-EE		Print Area X:1550 Y:1110

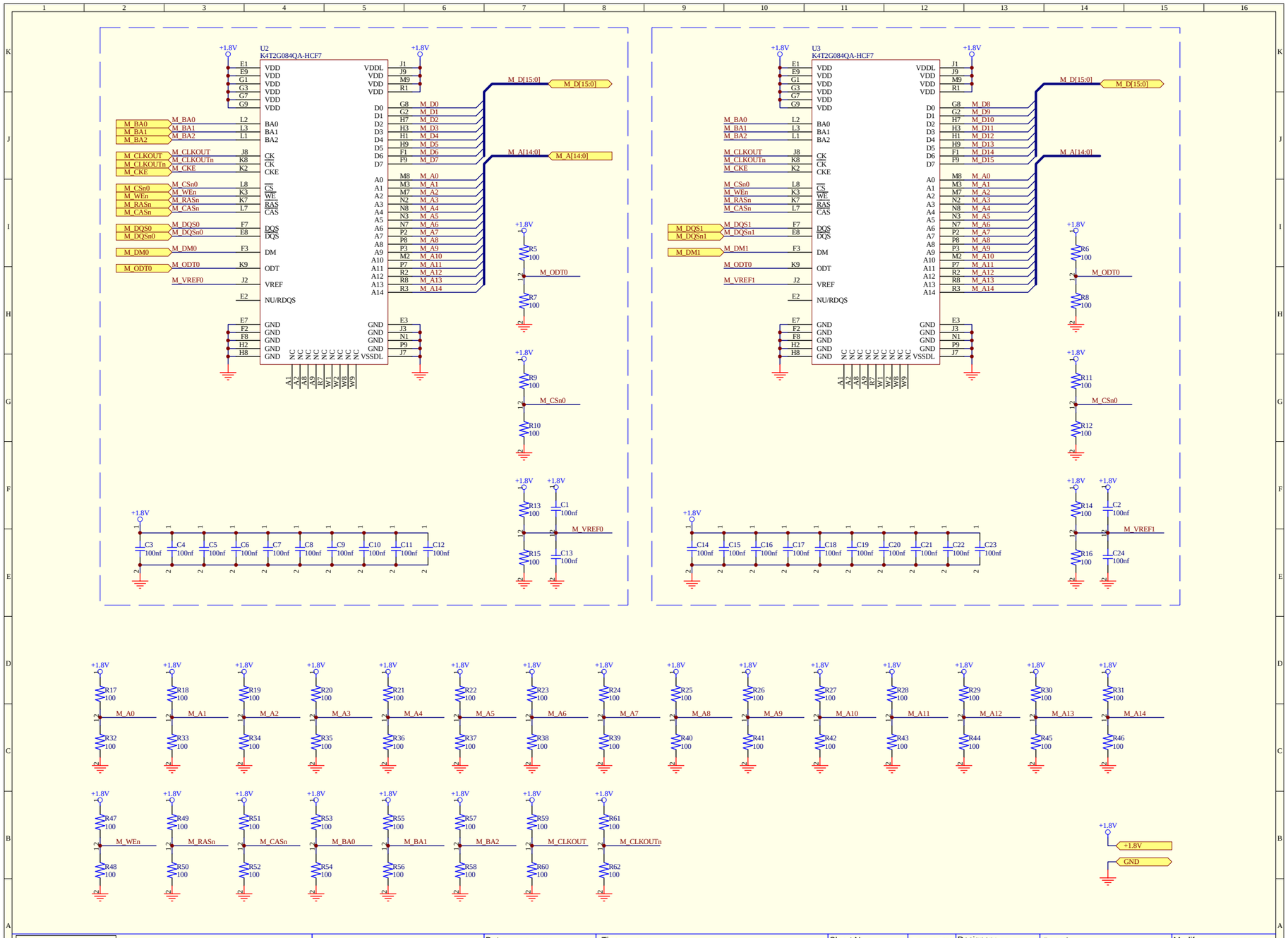
U2
K4T2G084QA-HCF7
U3
K4T2G084QA-HCF7
+1.8V
M_D[15:0]
M_A[14:0]
M_BA0
M_BA1
M_BA2
M_CLKOUT
M_CLKOUTn
M_CKE
M_CSn0
M_WEn
M_RASn
M_CASn
M_DQS0
M_DQSn0
M_DQS1
M_DQSn1
M_DM0
M_DM1
M_ODT0
M_VREF0
M_VREF1
M_CSn0
M_VREF0
M_VREF1
M_A0
M_A1
M_A2
M_A3
M_A4
M_A5
M_A6
M_A7
M_A8
M_A9
M_A10
M_A11
M_A12
M_A13
M_A14
M_WEn
M_RASn
M_CASn
M_BA0
M_BA1
M_BA2
M_CLKOUT
M_CLKOUTn
GND
Error : GS1.jpg file not found.
www.globalscaletechnologies.com
SHEEVA PLUG
Date : 18-Feb-2009
File : SDRAM0.Sch
Time : 09:43:14
Sheet No.3
Total pages :10
Paper Size A3
Designer : GTI-EE
drawer : GTI-EE
Remark
Modify: SHEEVA V6.0
Print Area X:1550 Y:1110

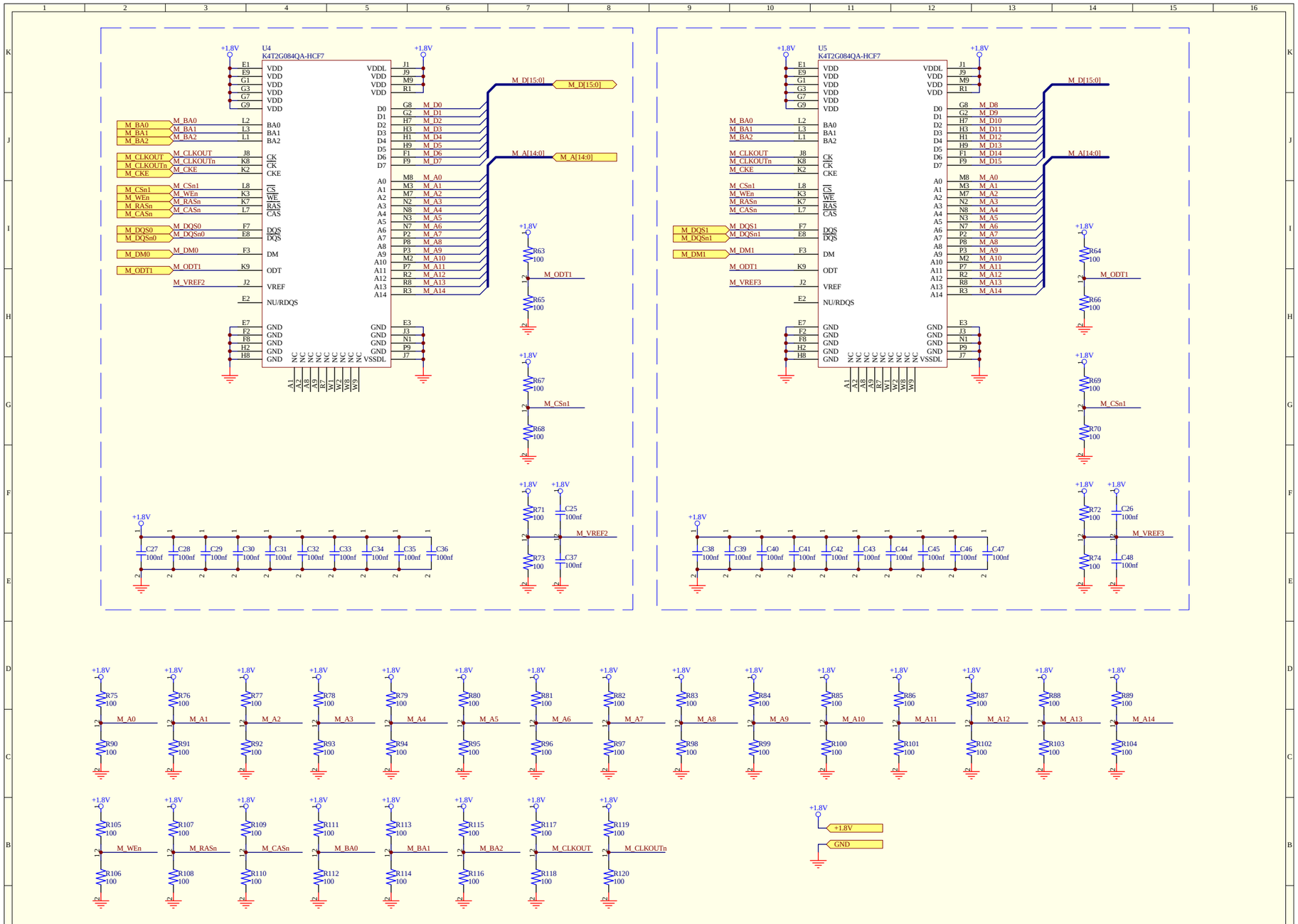

Error : GS1.jpg file not found.	www.globalscaletechnologies.com	SHEEVA PLUG	Date : 18-Feb-2009	Time : 09:43:15	Sheet No.4	Paper Size A3	Designer : GTI-EE	Remark	Modify: SHEEVA V6.0
			File : SDRAM1.Sch		Total pages :10		drawer : GTI-EE		Print Area X:1550 Y:1110

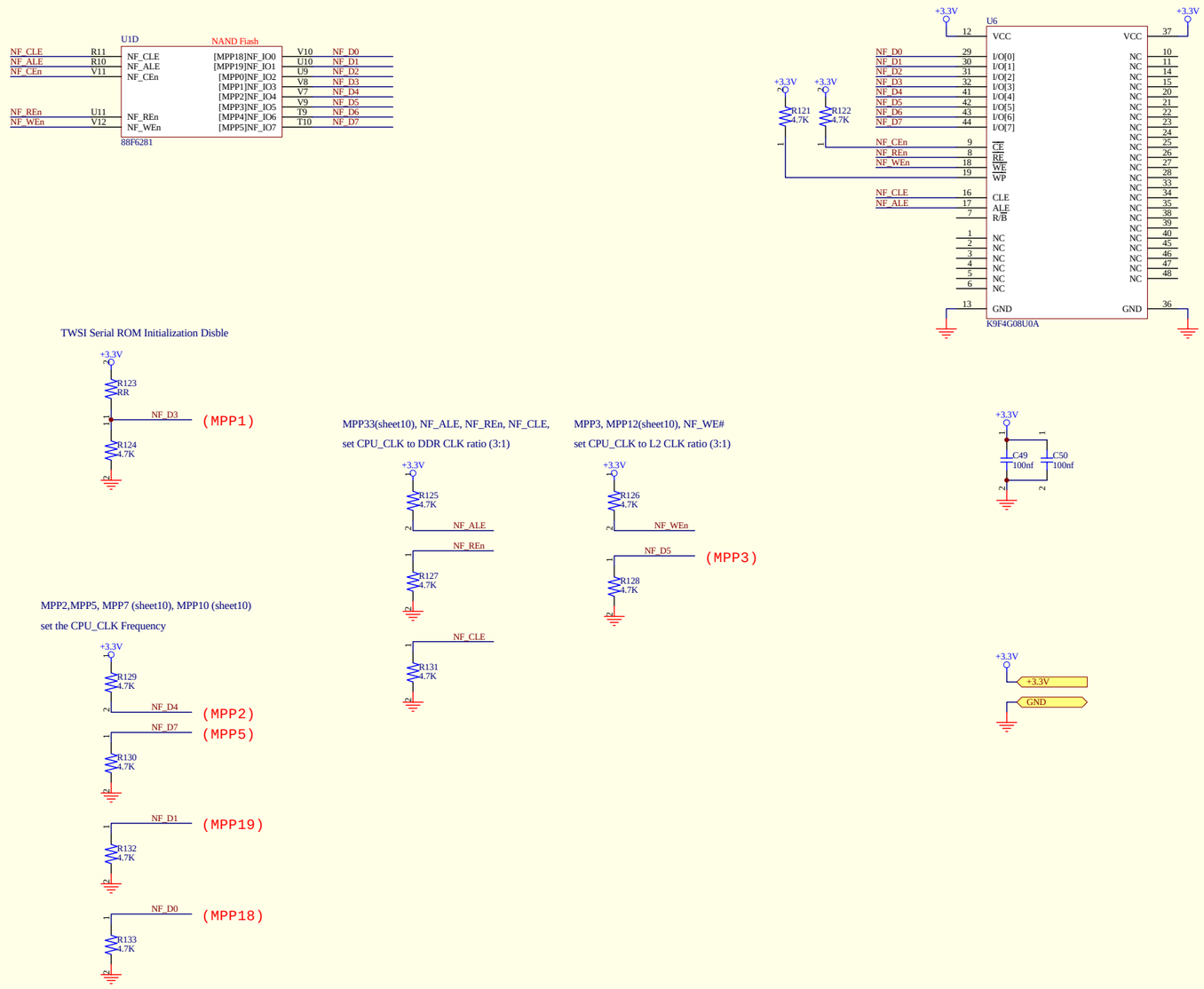

Error : GS1.jpg file not found.	www.globalscaletechnologies.com	SHEEVA PLUG	Date : 18-Feb-2009	Time : 09:43:15	Sheet No.5	Paper Size A3	Designer : GTI-EE	Remark	Modify: SHEEVA V6.0
			File : NAND.Sch		Total pages :10		drawer : GTI-EE		Print Area X:1550 Y:1110

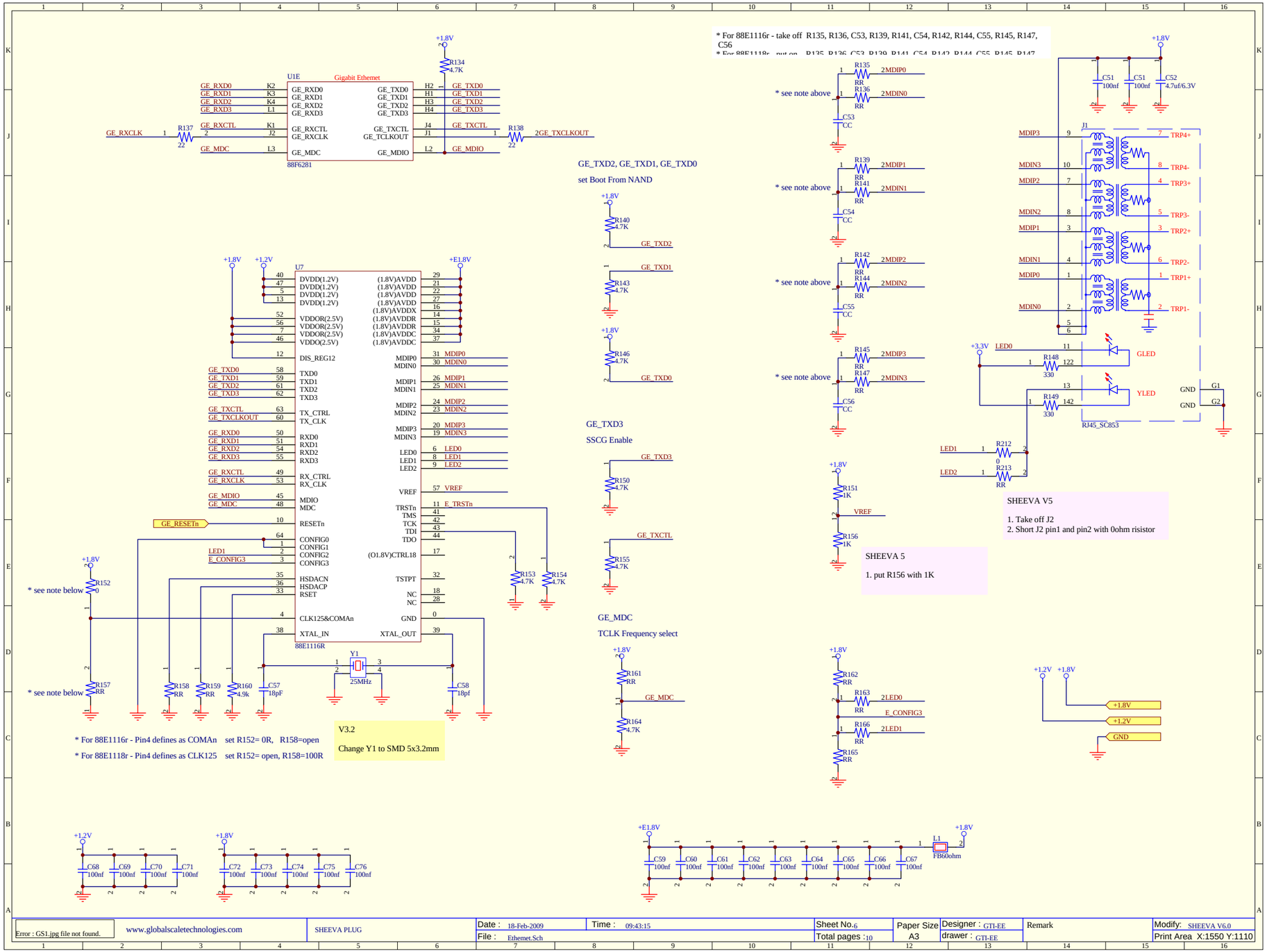

Error : GS1.jpg file not found.	www.globalscaletechnologies.com	SHEEVA PLUG	Date : 18-Feb-2009	Time : 09:43:15	Sheet No.6	Paper Size A3	Designer : GTI-EE	Remark	Modify: SHEEVA V6.0
			File : Ethemet.Sch		Total pages :10		drawer : GTI-EE		Print Area X:1550 Y:1110

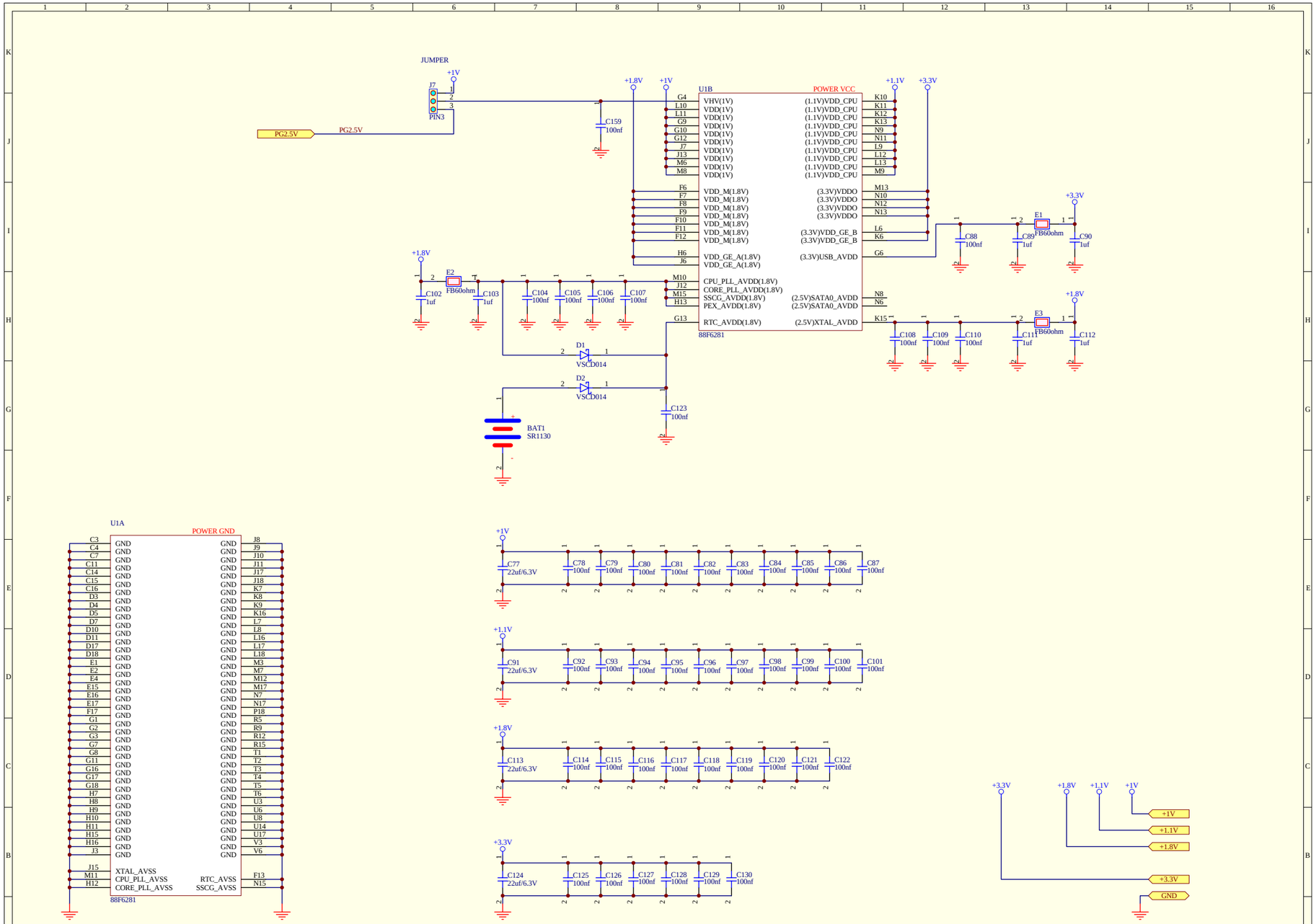

Error : GS1.jpg file not found.

www.globalscaletechnologies.com

SHEEVA PLUG

Date : 18-Feb-2009	Time : 09:43:15	Sheet No.7	Paper Size A3	Designer : GTI-EE	Remark
File : CPUPOWER.Sch		Total pages :10		drawer : GTI-EE	

Modify: SHEEVA V6.0

Print Area X:1550 Y:1110

V3.2

1. Add C162 to pin 10 and GND of U8
2. Add C163 to pin 10 and GND of U9
3. Add C164 to pin 1 and GND of U10

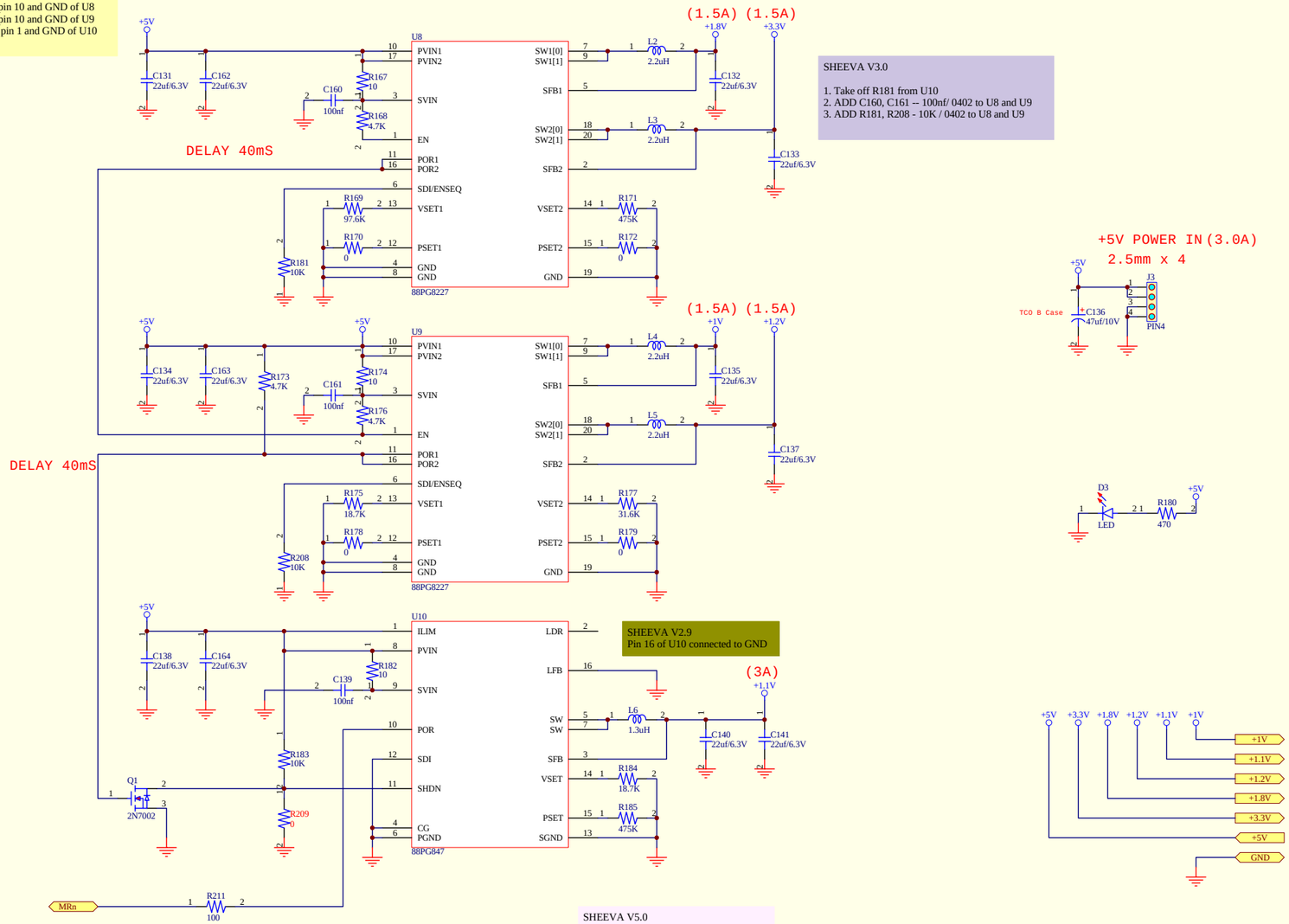

SHEEVA V3.0

1. Take off R181 from U10
2. ADD C160, C161 -- 100nf/ 0402 to U8 and U9
3. ADD R181, R208 - 10K / 0402 to U8 and U9

SHEEVA V2.9
Pin 16 of U10 connected to GND

SHEEVA V5.0

1. Take off Q1
2. Take off R183
3. Short circuit pin2 and pin3 of Q1 with R209

Error : GS1.jpg file not found.	www.globalscaletechnologies.com	SHEEVA PLUG	Date : 18-Feb-2009	Time : 09:43:16	Sheet No.:8	Paper Size A3	Designer : GTI-EE	Remark	Modify: SHEEVA V6.0
			File : POWER.Sch		Total pages :10		drawer : GTI-EE		Print Area X:1550 Y:1110

V3.2

Change Y3 to SMD 5x3.2mm

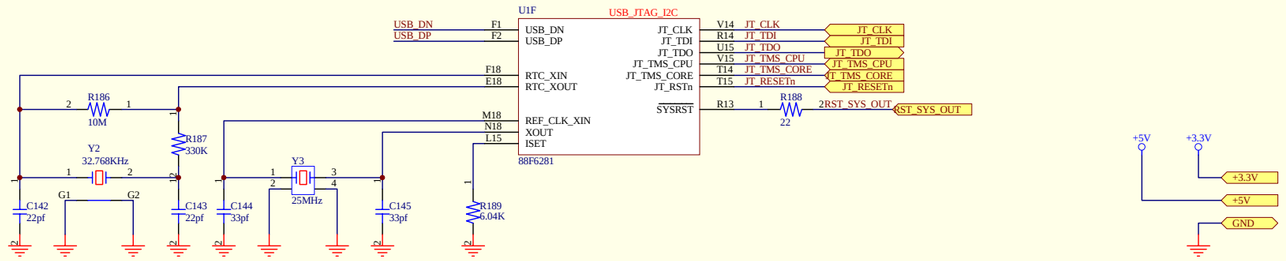

V3.2

Change Y3 to SMD 5x3.2mm

USB

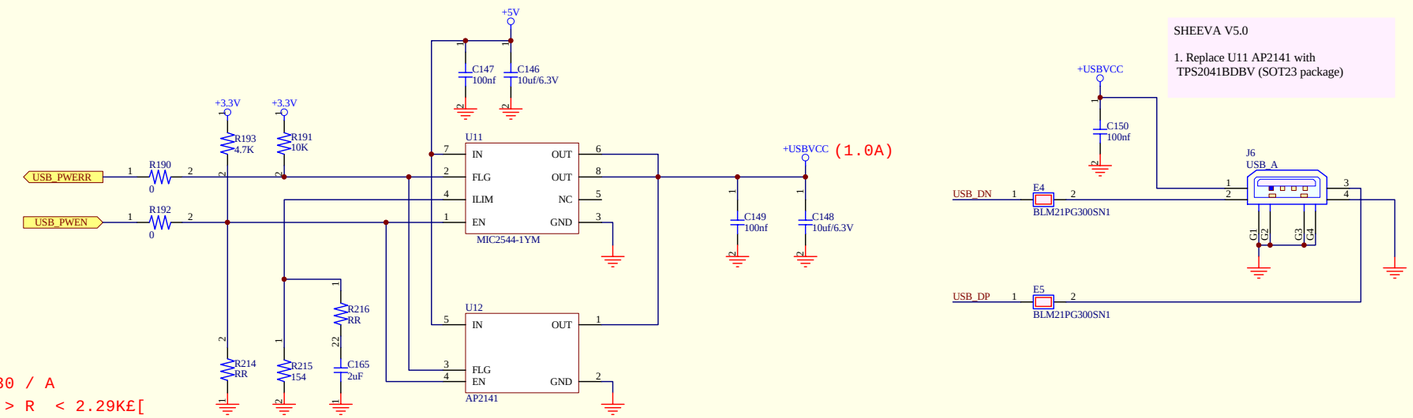

R = 230 / A
154£[> R < 2.29K£[

R125 : 154 [1500mA]
R125 : 460 [500mA]

SHEEVA V5.0

1. Replace U11 AP2141 with TPS2041BDBV (SOT23 package)

SHEEVA V5.3
1. Change U11 to AP2141 with SOT-23 package

SHEEVA V5.4

1. Change U11 to MIC2025-1YM with SIOC-8 package

SHEEVA V5.6

1. Change U11 to MIC2544-1YM with Sop-8 package
R125=460 : 500mA current limit
R125=154 : 1500mA current limit

2. Add U12- AP2141 with SOT-23/ 5pin package as cross option

Error : GS1.jpg file not found.	www.globalscaletechnologies.com	SHEEVA PLUG	Date : 18-Feb-2009	Time : 09:43:16	Sheet No.9	Paper Size A3	Designer : GTI-EE	Remark	Modify: SHEEVA V6.0
			File : USBIO.Sch		Total pages :10		drawer : GTI-EE		Print Area X:1550 Y:1110

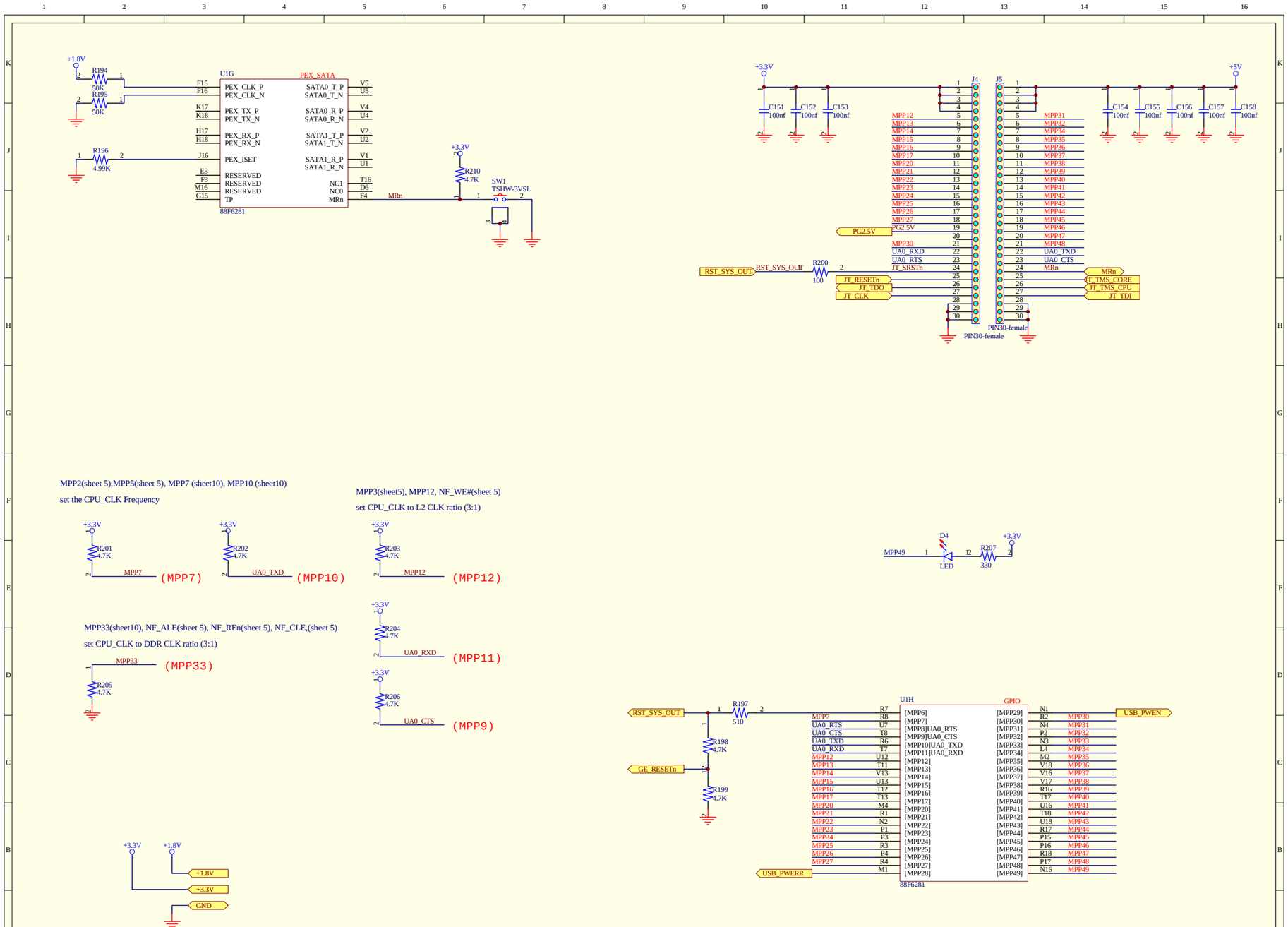

Error : G31.jpg file not found.

www.globalscaletechnologies.com

SHEEVA PLUG

Date : 18-Feb-2009	Time : 09:43:16	Sheet No. 10	Paper Size A3	Designer : GTI-EE	Remark
File : GPIO.Sch		Total pages : 10		drawer : GTI-EE	

Modify: SHEEVA V6.0

Print Area X:1550 Y:1110