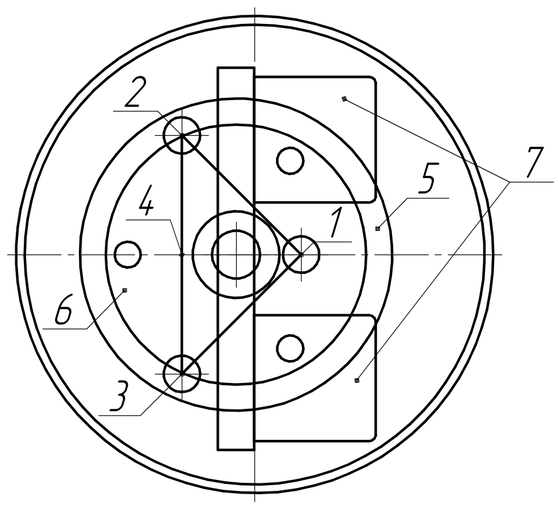

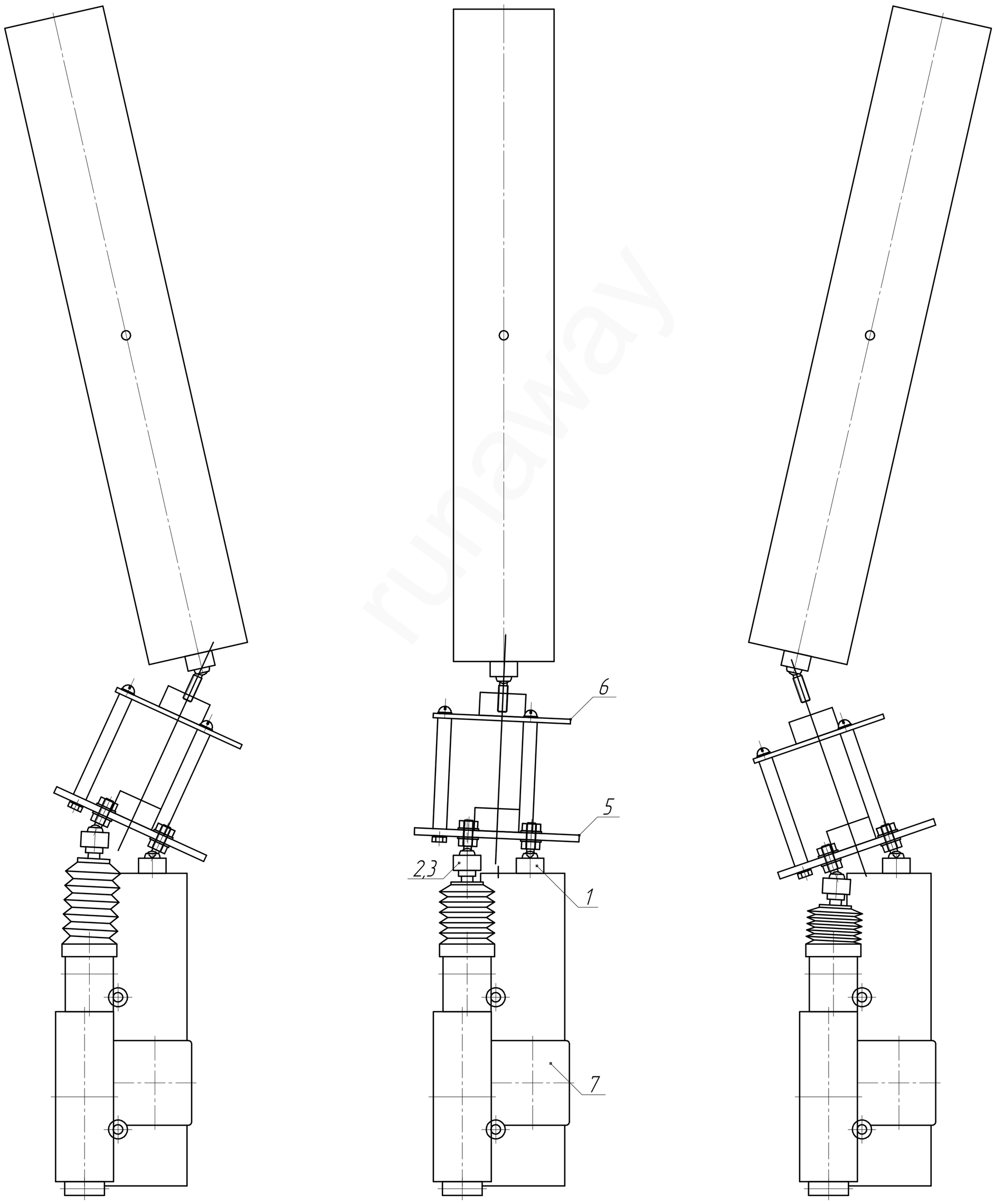

runaway