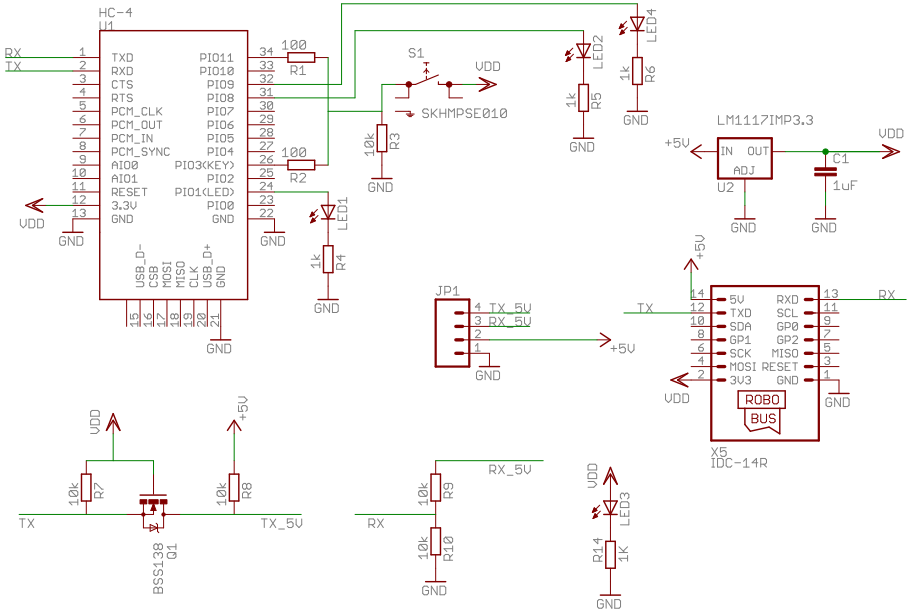

OR-BT-HC	Open Robotics
Revision: 1.0	OR-BT-HC-v1
Author: Open Robotics team	19.09.2012 3:14:27
	Sheet: 1/1