# Servo NanoShield v1

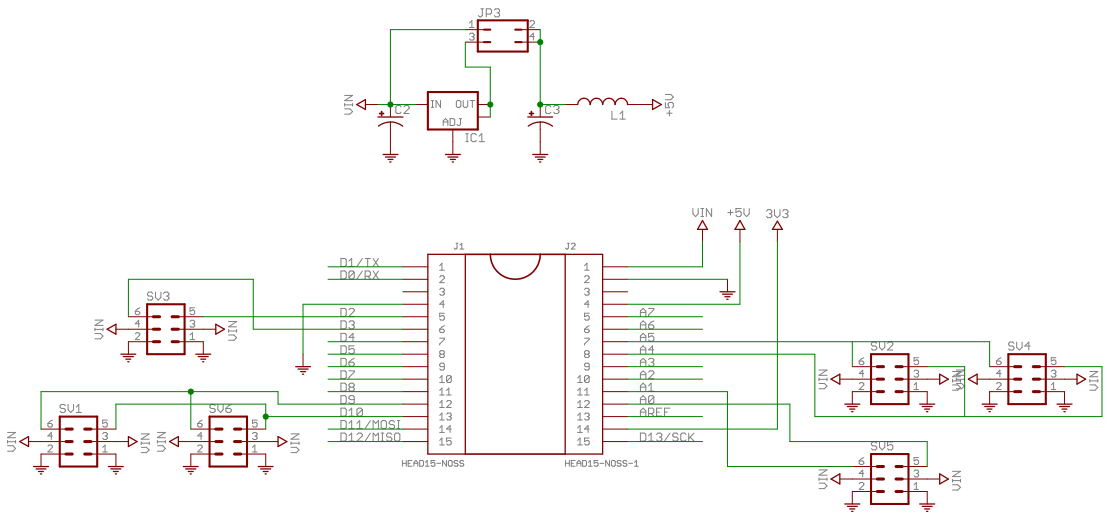


| | |
|---|---|
| TITLE: Nano-Shield-Servo | |
| Document Number: | REV: 1.0 |
| Date: 11.07.2010 13:53:01 | Sheet: 1/1 |