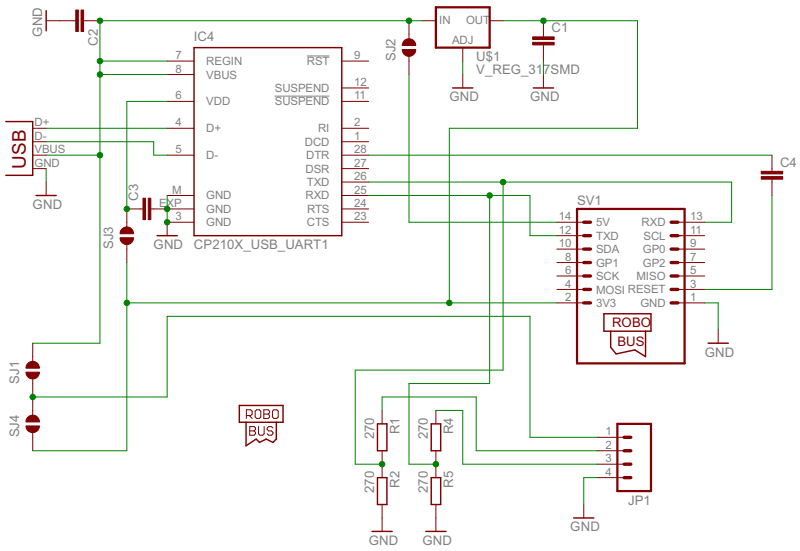

OR-USB-UART USB-UART bridge	Open Robotics
Revision: 2.0	OR-USB-UART-v1
Author: Open Robotics team	06.03.2010 20:47:18
	Sheet: 1/1