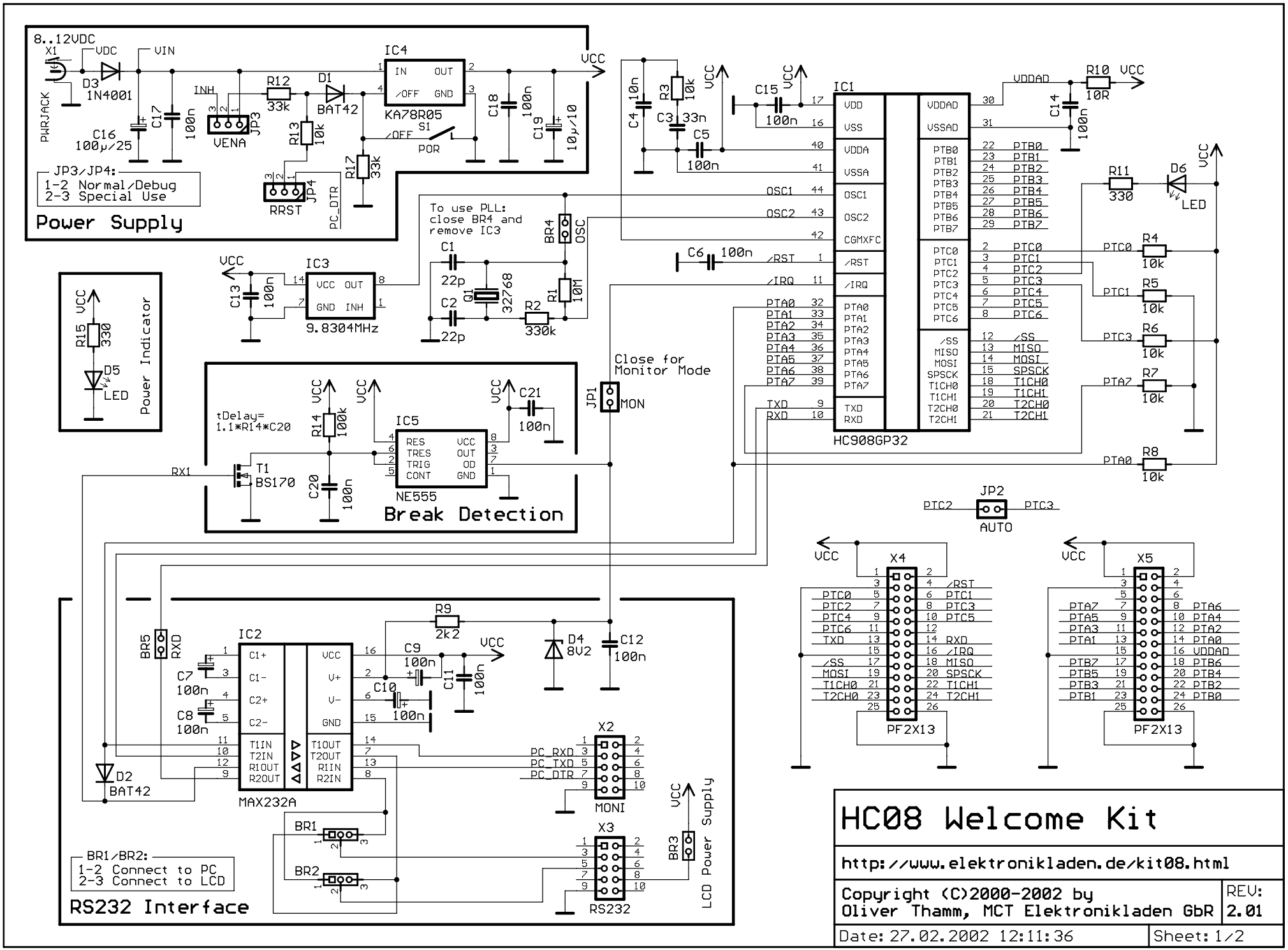
8..12VDC
X1
PWRJACK
VDC
D3
1N4001
VIN
C16
100µ/25
C17
100n
INH
JP3
VENA
R12
33k
D1
BAT42
R13
10k
IC4
IN
OUT
/OFF
GND
KA78R05
S1
/OFF
POR
C18
100n
C19
10µ/10
VCC
R17
33k
JP4
RRST
PC_DTR
JP3/JP4:
1-2 Normal/Debug
2-3 Special Use
Power Supply
To use PLL:
close BR4 and
remove IC3
BR4
OSC
C1
22p
Q1
32768
C2
22p
R2
330k
R1
10M
IC3
VCC
OUT
GND
INH
9.8304MHz
C13
100n
R15
330
D5
LED
Power Indicator
tDelay=
1.1*R14*C20
R14
100k
C20
100n
IC5
RES
TRES
TRIG
CONT
VCC
OUT
OD
GND
NE555
C21
100n
T1
BS170
RX1
Break Detection
JP1
MON
Close for
Monitor Mode
C4
10n
R3
10k
C3
33n
C5
100n
C15
100n
C6
100n
IC1
VDD
VSS
VDDA
VSSA
OSC1
OSC2
CGMXFC
/RST
/IRQ
PTA0
PTA1
PTA2
PTA3
PTA4
PTA5
PTA6
PTA7
TXD
RXD
VDDAD
VSSAD
PTB0
PTB1
PTB2
PTB3
PTB4
PTB5
PTB6
PTB7
PTC0
PTC1
PTC2
PTC3
PTC4
PTC5
PTC6
/SS
MISO
MOSI
SPSCK
T1CH0
T1CH1
T2CH0
T2CH1
HC908GP32
R10
10R
C14
100n
R11
330
D6
LED
R4
10k
R5
10k
R6
10k
R7
10k
R8
10k
JP2
AUTO
PTC2
PTC3
X4
PF2X13
X5
PF2X13
IC2
C1+
C1-
C2+
C2-
T1IN
T2IN
R1OUT
R2OUT
VCC
V+
V-
GND
T1OUT
T2OUT
R1IN
R2IN
MAX232A
C7
100n
C8
100n
C9
100n
C10
100n
C11
100n
R9
2k2
D4
8V2
C12
100n
BR5
RXD
D2
BAT42
X2
MONI
PC_RXD
PC_TXD
PC_DTR
X3
RS232
BR1
BR2
BR1/BR2:
1-2 Connect to PC
2-3 Connect to LCD
RS232 Interface
BR3
LCD Power Supply
HC08 Welcome Kit
http://www.elektronikladen.de/kit08.html
Copyright (C)2000-2002 by
Oliver Thamm, MCT Elektronikladen GbR
REV:
2.01
Date: 27.02.2002 12:11:36
Sheet: 1/2

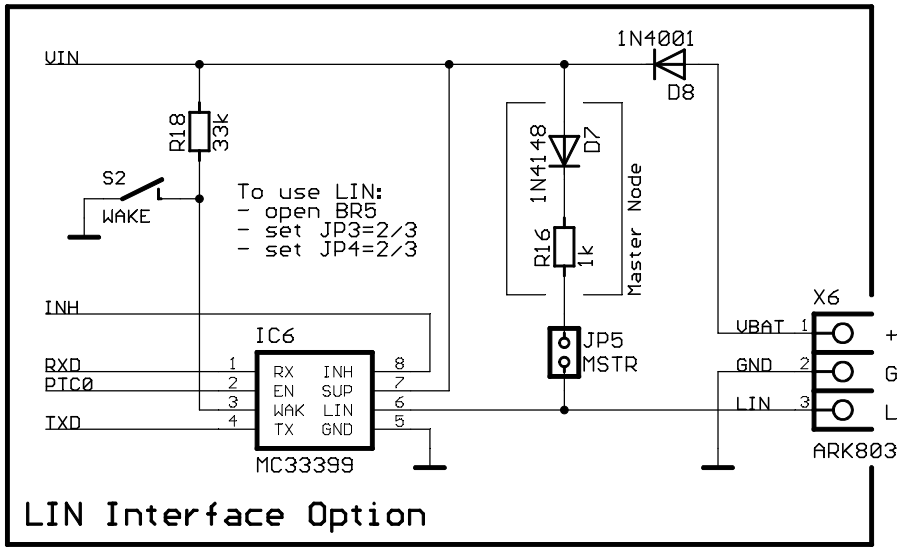
VIN
1N4001
D8
R18
33k
S2
WAKE
To use LIN:
- open BR5
- set JP3=2/3
- set JP4=2/3
1N4148
D7
R16
1k
Master Node
INH
IC6
RXD
PTC0
TXD
RX
EN
WAK
TX
INH
SUP
LIN
GND
MC33399
JP5
MSTR
X6
VBAT
GND
LIN
+
G
L
ARK803
LIN Interface Option