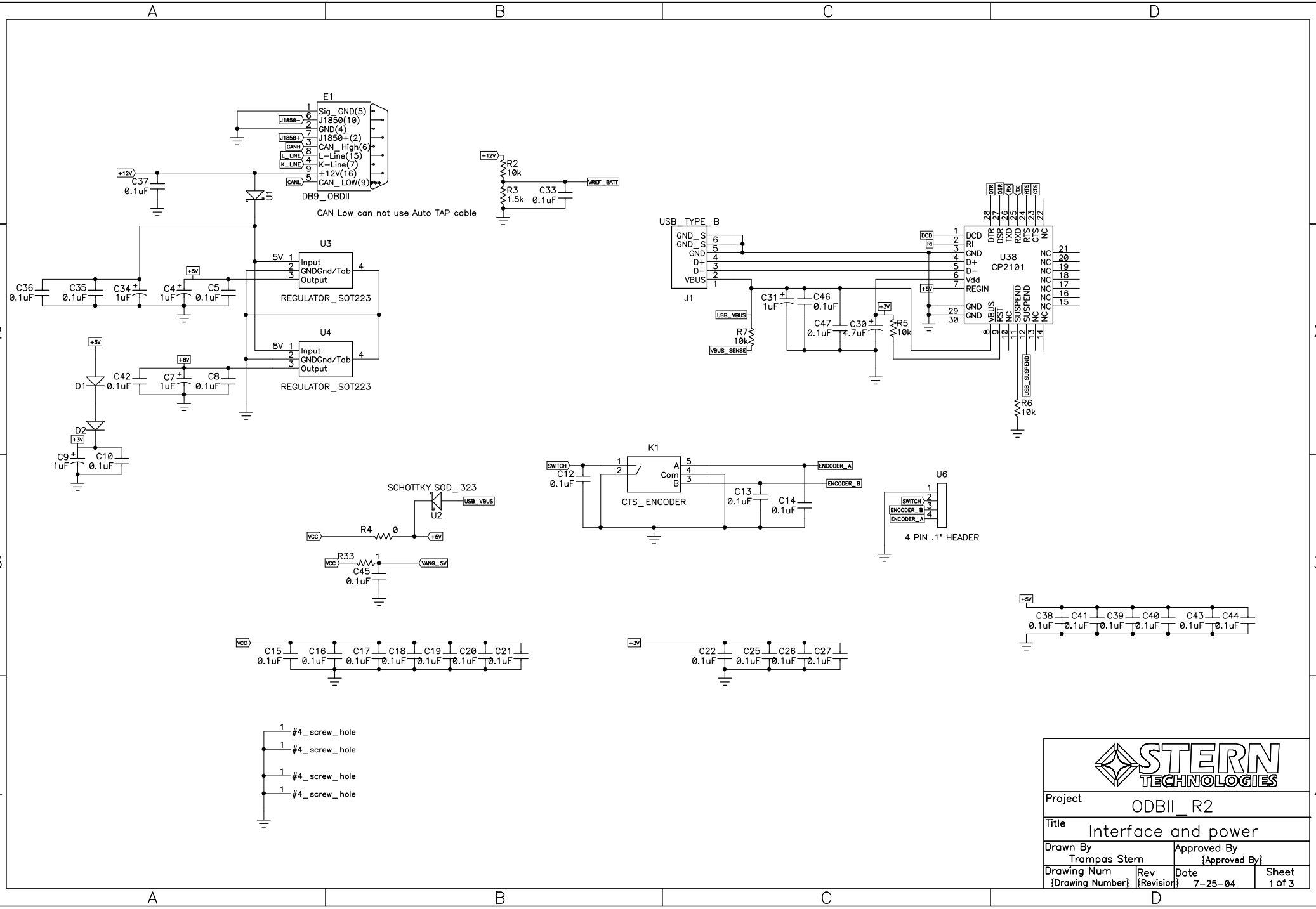

STERN TECHNOLOGIES

Project	ODBII_R2
Title	Interface and power
Drawn By	Trampas Stern
Approved By	{Approved By}
Drawing Num	{Drawing Number}
Rev	{Revision}
Date	7-25-04
Sheet	1 of 3

OUT_ PWM drives the PWM output on J1850
OUT_ VPW drives the VPW output on J1850
ENABLE_ PWM will place 2.5V bias on J1850– for PWM

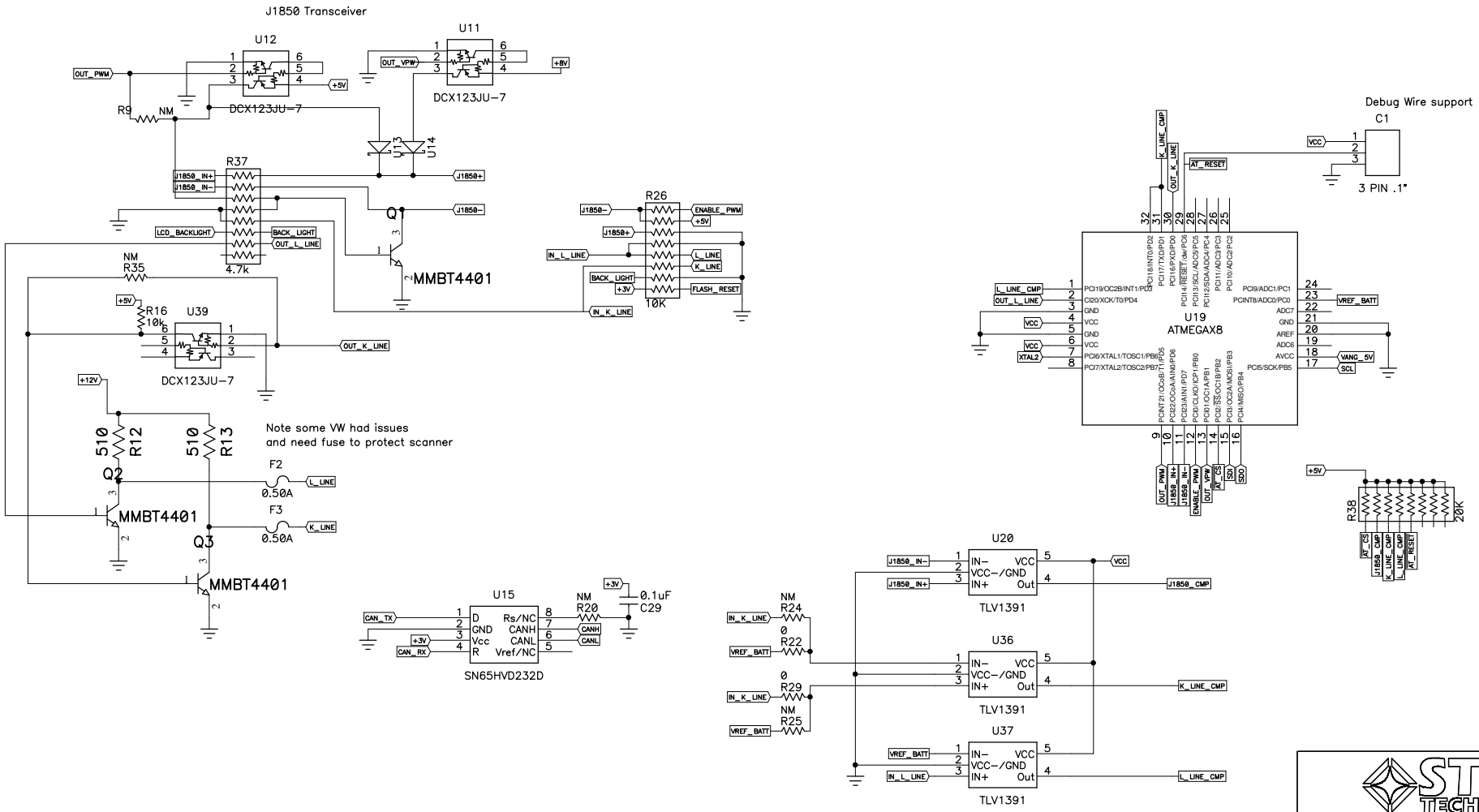

STERN TECHNOLOGIES

Project	ODBII_ R2
Title	J1850
Drawn By: Trampas Stern	Approved By: {Approved By}
Drawing Num: {Drawing Number}	Rev: {Revision}
Date: 7–25–04	Sheet: 2 of 3

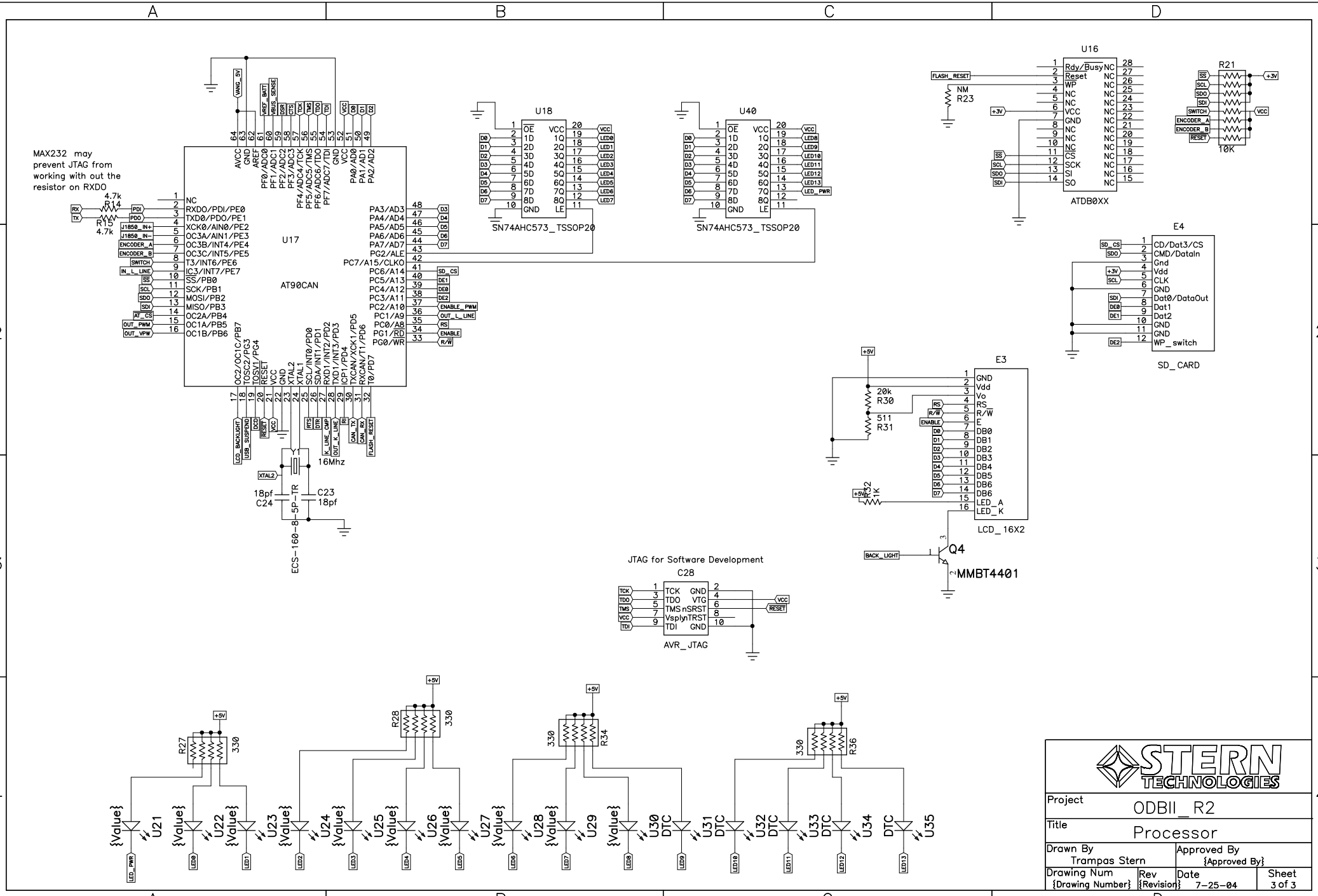
MAX232 may prevent JTAG from working with out the resistor on RXDO
U17
AT90CAN
U18
SN74AHC573_TSSOP20
U40
SN74AHC573_TSSOP20
U16
ATDB0XX
R21
10K
E4
SD_CARD
E3
LCD_16X2
Q4
MMBT4401
16Mhz
ECS-160-8-5P-TR
JTAG for Software Development
C28
AVR_JTAG
STERN TECHNOLOGIES
Project
ODBII_R2
Title
Processor
Drawn By
Trampas Stern
Approved By
{Approved By}
Drawing Num
{Drawing Number}
Rev
{Revision}
Date
7-25-04
Sheet
3 of 3